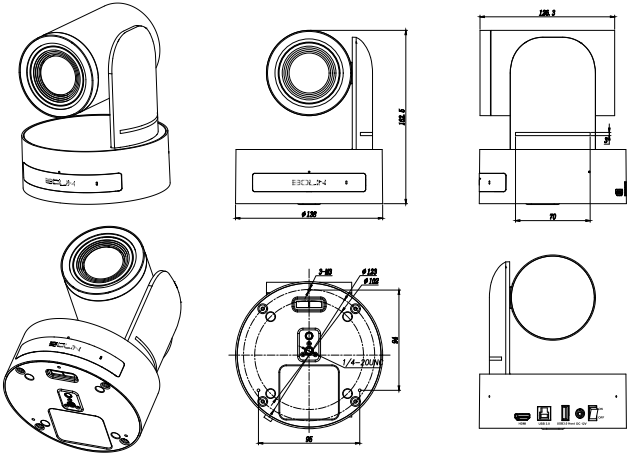

126.3
162.5
ø138
70
3-ø3
ø123
ø102
94
1/4-20UNC
95
HDMI
USB 2.0
DIRECT PWR DC 12V